BUSINESS REQUIREMENTS

EPMP

PROJECT NAME	DEMAND NUMBER	BUSINESS DEPTT.	APPLICATION DEPTT.	BRD APPROVED?	PROJECT MANAGER	SOLUTION TYPE
Enterprise Project Management Platform(EPMP)	SCP25260824165280	DE-GOV1	DE-GOV1	Yes	Aman Kumar Jha	NEW
SOLUTION DESIGN DOCUMENT NAME	**DOC VERSION**	**REQUEST DATE**	**REVIEW STAGE**	**TYPE CLASSIFICATION**	**APP. SUPPORT DEPTT.**	**APPLICATION NAME**
EPMP Solution Architecture	1.0	25-03-2026	DESIGN	A	GOV1	Enterprise Project Management Platform(EPMP)

Design the following as a part of EPMP:

- Ideation Management
- End-to-End Project & Program Management
- Execution Management
  - Risk Management
  - Decision & Approval Record (DAR) Management
  - Action Management
  - Dependency management
- Resource Management
- Startup & Innovation Management
- Governance, Compliance & Auditability
- Reporting & Analytics

REVIEW REF NO.	EA REVIEW VERSION	DATE OF REVIEW	REVIEWER	EXCEPTION APPROVAL?	APPROVAL STATUS & REMARKS
<EA1234>	<1.0/1.1/etc>	(DD-MM-YYYY)	RAKESH K PANDEY	(YES/NO)	(APPROVED/REJECTED/PENDING FOR INFO.)

BUSINESS VALUES

EPMP

PROJECT NAME	DEMAND NUMBER	BUSINESS DEPTT.	APPLICATION DEPTT.	BRD APPROVED?	PROJECT MANAGER	SOLUTION TYPE
Enterprise Project Management Platform(EPMP)	SCP25260824165280	DE-GOV1	DE-GOV1	Yes	Aman Kumar Jha	NEW
SOLUTION DESIGN DOCUMENT NAME	**DOC VERSION**	**REQUEST DATE**	**REVIEW STAGE**	**TYPE CLASSIFICATION**	**APP. SUPPORT DEPTT.**	**APPLICATION NAME**
EPMP Solution Architecture	1.0	25-03-2026	DESIGN	A	GOV1	Enterprise Project Management Platform(EPMP)

Essential Project with the following set of qualitative values:

- Improved Governance & Transparency
- Faster Ideation-to-Execution Cycle
- Optimized Resource Utilization
- Enhanced Decision-Making Quality
- Scalability & Future Readiness
- Reduced Operational & Compliance Risk
- Leadership & Portfolio Visibility

ROI Indicators (Indicative):

- Reduction in manual effort for reporting and governance.
- Improved project success rate and schedule adherence.
- Early risk detection reducing downstream cost overruns.
- Faster innovation throughput converting ideas to value.

REVIEW REF NO.	EA REVIEW VERSION	DATE OF REVIEW	REVIEWER	EXCEPTION APPROVAL?	APPROVAL STATUS & REMARKS
<EA1234>	<1.0/1.1/etc>	(DD-MM-YYYY)	RAKESH K PANDEY	(YES/NO)	(APPROVED/REJECTED/PENDING FOR INFO.)

USER EXPERIENCE DESIGN

EPMP

PROJECT NAME	DEMAND NUMBER	BUSINESS DEPTT.	APPLICATION DEPTT.	BRD APPROVED?	PROJECT MANAGER	SOLUTION TYPE
Enterprise Project Management Platform(EPMP)	SCP25260824165280	DE-GOV1	DE-GOV1	Yes	Aman Kumar Jha	NEW
SOLUTION DESIGN DOCUMENT NAME	**DOC VERSION**	**REQUEST DATE**	**REVIEW STAGE**	**TYPE CLASSIFICATION**	**APP. SUPPORT DEPTT.**	**APPLICATION NAME**
EPMP Solution Architecture	1.0	25-03-2026	DESIGN	A	GOV1	Enterprise Project Management Platform(EPMP)

REVIEW REF NO.	EA REVIEW VERSION	DATE OF REVIEW	REVIEWER	EXCEPTION APPROVAL?	APPROVAL STATUS & REMARKS
<EA1234>	<1.0/1.1/etc>	(DD-MM-YYYY)	RAKESH K PANDEY	(YES/NO)	(APPROVED/REJECTED/PENDING FOR INFO.)

BUSINESS PROCESS DIAGRAM

EPMP

PROJECT NAME	DEMAND NUMBER	BUSINESS DEPTT.	APPLICATION DEPTT.	BRD APPROVED?	PROJECT MANAGER	SOLUTION TYPE
Enterprise Project Management Platform(EPMP)	SCP25260824165280	DE-GOV1	DE-GOV1	Yes	Aman Kumar Jha	NEW
SOLUTION DESIGN DOCUMENT NAME	**DOC VERSION**	**REQUEST DATE**	**REVIEW STAGE**	**TYPE CLASSIFICATION**	**APP. SUPPORT DEPTT.**	**APPLICATION NAME**
EPMP Solution Architecture	1.0	25-03-2026	DESIGN	A	GOV1	Enterprise Project Management Platform(EPMP)

REVIEW REF NO.	EA REVIEW VERSION	DATE OF REVIEW	REVIEWER	EXCEPTION APPROVAL?	APPROVAL STATUS & REMARKS
<EA1234>	<1.0/1.1/etc>	(DD-MM-YYYY)	RAKESH K PANDEY	(YES/NO)	(APPROVED/REJECTED/PENDING FOR INFO.)

INFORMATION ARCHITECTURE DIAGRAM

EPMP

PROJECT NAME	DEMAND NUMBER	BUSINESS DEPTT.	APPLICATION DEPTT.	BRD APPROVED?	PROJECT MANAGER	SOLUTION TYPE
Enterprise Project Management Platform(EPMP)	SCP25260824165280	DE-GOV1	DE-GOV1	Yes	Aman Kumar Jha	NEW
SOLUTION DESIGN DOCUMENT NAME	**DOC VERSION**	**REQUEST DATE**	**REVIEW STAGE**	**TYPE CLASSIFICATION**	**APP. SUPPORT DEPTT.**	**APPLICATION NAME**
EPMP Solution Architecture	1.0	25-03-2026	DESIGN	A	GOV1	Enterprise Project Management Platform(EPMP)

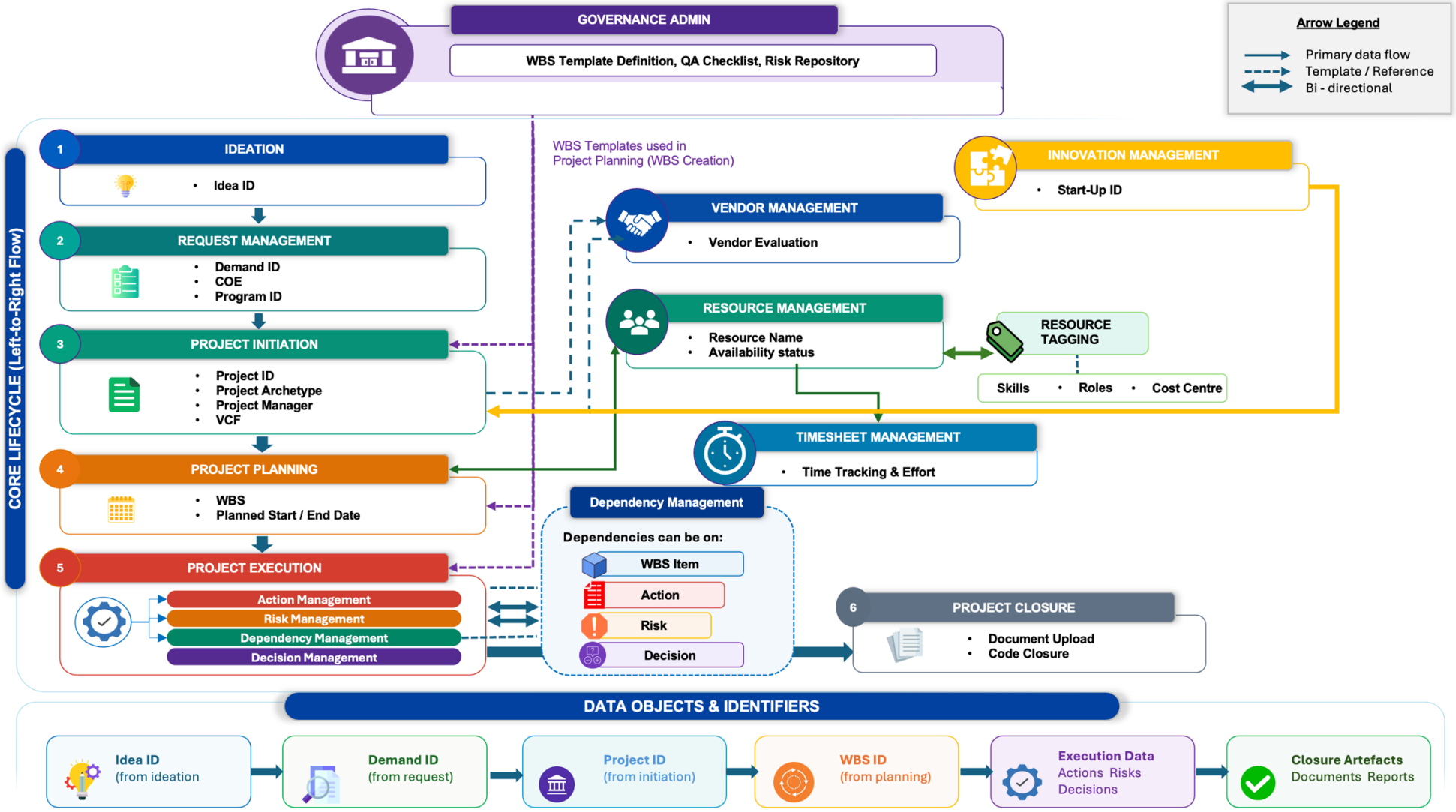

REVIEW REF NO.	EA REVIEW VERSION	DATE OF REVIEW	REVIEWER	EXCEPTION APPROVAL?	APPROVAL STATUS & REMARKS
<EA1234>	<1.0/1.1/etc>	(DD-MM-YYYY)	RAKESH K PANDEY	(YES/NO)	(APPROVED/REJECTED/PENDING FOR INFO.)

PROJECT NAME	DEMAND NUMBER	BUSINESS DEPTT.	APPLICATION DEPTT.	BRD APPROVED?	PROJECT MANAGER	SOLUTION TYPE
Enterprise Project Management Platform(EPMP)	SCP25260824165280	DE-GOV1	DE-GOV1	Yes	Aman Kumar Jha	NEW
SOLUTION DESIGN DOCUMENT NAME	**DOC VERSION**	**REQUEST DATE**	**REVIEW STAGE**	**TYPE CLASSIFICATION**	**APP. SUPPORT DEPTT.**	**APPLICATION NAME**
EPMP Solution Architecture	1.0	25-03-2026	DESIGN	A	GOV1	Enterprise Project Management Platform(EPMP)

Integration Architecture

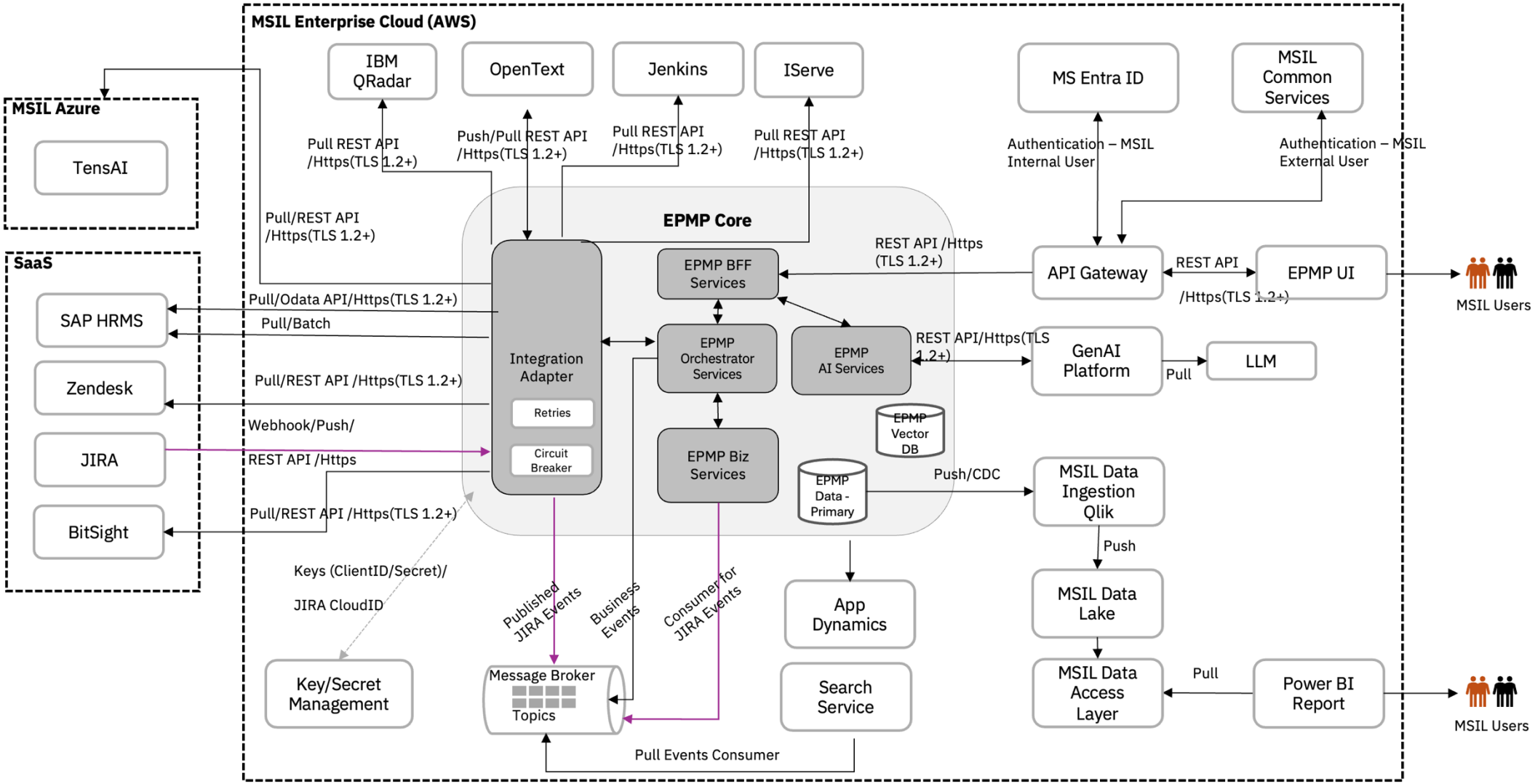

REVIEW REF NO.	EA REVIEW VERSION	DATE OF REVIEW	REVIEWER	EXCEPTION APPROVAL?	APPROVAL STATUS & REMARKS
<EA1234>	<1.0/1.1/etc>	(DD-MM-YYYY)	RAKESH K PANDEY	(YES/NO)	(APPROVED/REJECTED/PENDING FOR INFO.)

APPLICATION ARCHITECTURE DIAGRAM

EPMP

PROJECT NAME	DEMAND NUMBER	BUSINESS DEPTT.	APPLICATION DEPTT.	BRD APPROVED?	PROJECT MANAGER	SOLUTION TYPE
Enterprise Project Management Platform(EPMP)	SCP25260824165280	DE-GOV1	DE-GOV1	Yes	Aman Kumar Jha	NEW
SOLUTION DESIGN DOCUMENT NAME	**DOC VERSION**	**REQUEST DATE**	**REVIEW STAGE**	**TYPE CLASSIFICATION**	**APP. SUPPORT DEPTT.**	**APPLICATION NAME**
EPMP Solution Architecture	1.0	25-03-2026	DESIGN	A	GOV1	Enterprise Project Management Platform(EPMP)

Technical Architecture

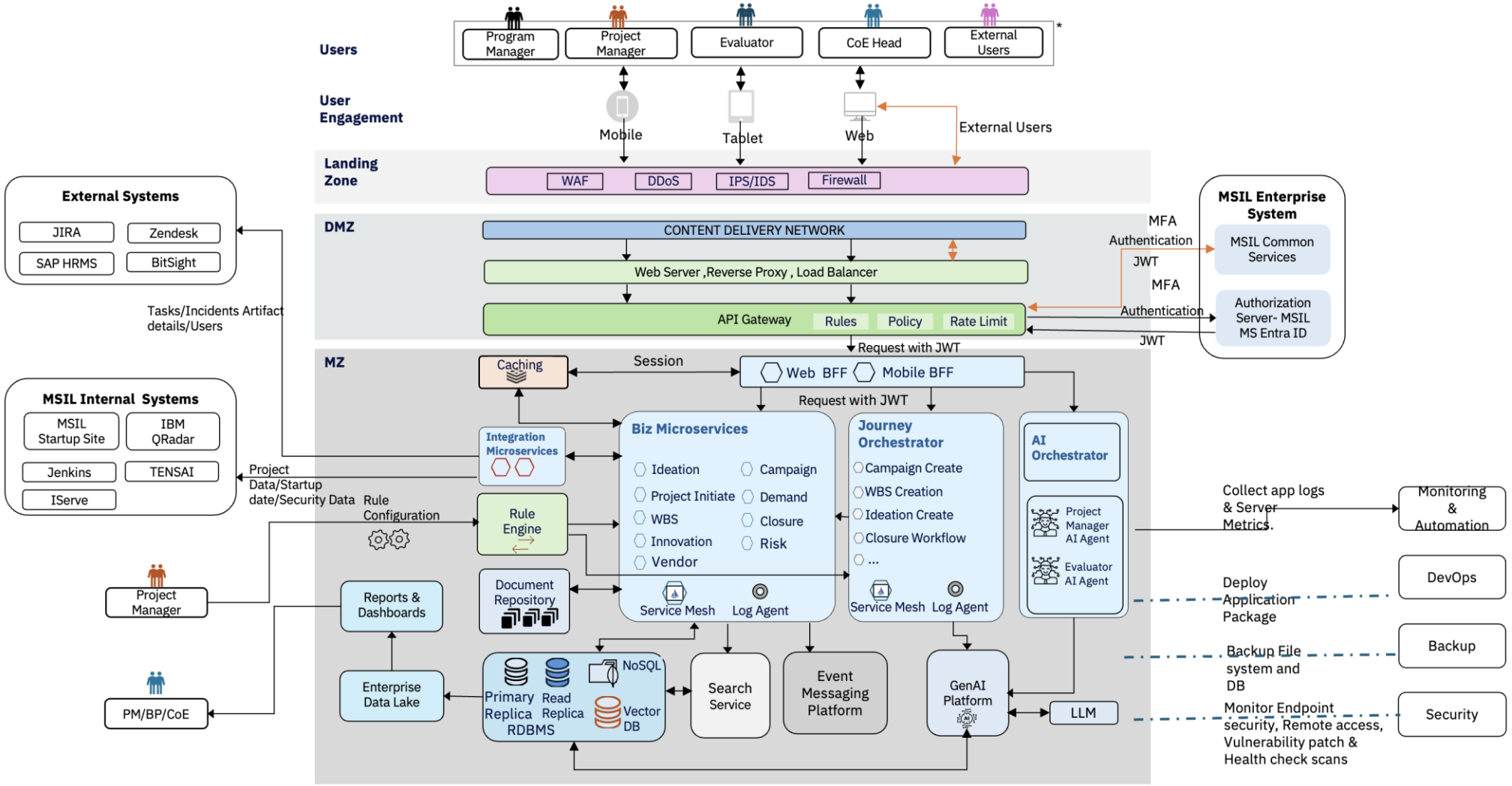

REVIEW REF NO.	EA REVIEW VERSION	DATE OF REVIEW	REVIEWER	EXCEPTION APPROVAL?	APPROVAL STATUS & REMARKS
<EA1234>	<1.0/1.1/etc>	(DD-MM-YYYY)	RAKESH K PANDEY	(YES/NO)	(APPROVED/REJECTED/PENDING FOR INFO.)

PROJECT NAME	DEMAND NUMBER	BUSINESS DEPTT.	APPLICATION DEPTT.	BRD APPROVED?	PROJECT MANAGER	SOLUTION TYPE
Enterprise Project Management Platform(EPMP)	SCP25260824165280	DE-GOV1	DE-GOV1	Yes	Aman Kumar Jha	NEW
SOLUTION DESIGN DOCUMENT NAME	**DOC VERSION**	**REQUEST DATE**	**REVIEW STAGE**	**TYPE CLASSIFICATION**	**APP. SUPPORT DEPTT.**	**APPLICATION NAME**
EPMP Solution Architecture	1.0	25-03-2026	DESIGN	A	GOV1	Enterprise Project Management Platform(EPMP)

Component Descriptions

Layer	Component	Technical Description
User Engagement	EPMP Mobile App	Mobile client delivering on-the-go access to approvals, task actions, status updates and alerts. Optimised for variable network conditions and simplified interaction patterns.
User Engagement	EPMP Web Portal	Primary browser-based application for dashboards, workflow actions, configuration, reporting and collaboration. Supports role-based UI composition and enterprise access controls.
Landing Zone	WAF (Web Application Firewall)	Protects EPMP web and API endpoints by inspecting HTTP/HTTPS requests and blocking malicious payloads such as SQL injection, XSS, and API abuse. Enforces rule-based filtering, rate limiting, and bot protection before traffic reaches the API Gateway.
Landing Zone	DDoS Protection	Safeguards EPMP availability by detecting and mitigating large-scale traffic floods (Layer 3/4/7 attacks). Automatically absorbs and filters volumetric attacks to ensure system uptime and consistent performance under abnormal traffic conditions.
Landing Zone	Firewall	Controls inbound and outbound network traffic using predefined security rules. Segregates EPMP environments (public, private, internal services) and restricts access to only trusted IP ranges, ports, and protocols, forming a foundational network security boundary.
Landing Zone	IDS/IPS	Monitors and analyzes network traffic for suspicious or malicious activity. IDS provides real-time detection and alerting, while IPS actively blocks or prevents identified threats. Enhances EPMP security through deep packet inspection and anomaly detection across internal and external traffic flows.
DMZ	Content Delivery Network	Edge distribution layer for static content, API acceleration and low-latency delivery. Also helps absorb traffic bursts and improves end-user response time.
DMZ	Reverse Proxy / Load Balancer Layer	Ingress layer that terminates TLS, balances traffic and forwards requests to APIs or BFF services. Supports high availability and routing controls.
DMZ	API Gateway	Single entry point for client and partner APIs, handling authentication, routing, throttling, request validation and observability. Enforces consistent API governance. Request handling rules such as header checks, schema validation, conditional routing and consumer-specific behaviour at the gateway edge. Security and governance policies including auth enforcement, CORS, request/response transformation and consumer access constraints. Rate Limiting controls request volumes to protect downstream services and ensure fair usage for channels and external consumers.

REVIEW REF NO.	EA REVIEW VERSION	DATE OF REVIEW	REVIEWER	EXCEPTION APPROVAL?	APPROVAL STATUS & REMARKS
<EA1234>	<1.0/1.1/etc>	(DD-MM-YYYY)	RAKESH K PANDEY	(YES/NO)	(APPROVED/REJECTED/PENDING FOR INFO.)

PROJECT NAME	DEMAND NUMBER	BUSINESS DEPTT.	APPLICATION DEPTT.	BRD APPROVED?	PROJECT MANAGER	SOLUTION TYPE
Enterprise Project Management Platform(EPMP)	SCP25260824165280	DE-GOV1	DE-GOV1	Yes	Aman Kumar Jha	NEW
SOLUTION DESIGN DOCUMENT NAME	**DOC VERSION**	**REQUEST DATE**	**REVIEW STAGE**	**TYPE CLASSIFICATION**	**APP. SUPPORT DEPTT.**	**APPLICATION NAME**
EPMP Solution Architecture	1.0	25-03-2026	DESIGN	A	GOV1	Enterprise Project Management Platform(EPMP)

Component Descriptions

Layer	Component	Technical Description
Identity	Authorization Server - MSIL Entra AD	Enterprise identity provider issuing tokens and managing SSO, group membership and access lifecycle for MSIL EPMP users.
Identity	Authorization Server – MSIL Common Services	Enterprise identity provider issuing tokens and managing SSO, group membership and access lifecycle for external users.
BFF	Web BFF	Client-specific backend that aggregates data for the web portal, reduces chatty calls and performs light response shaping for dashboards and screens.
BFF	Mobile BFF	Mobile-optimised backend exposing lean payloads, mobile-specific orchestration and channel-specific controls for latency and bandwidth efficiency.
Application	Biz Microservices	Core domain microservices implementing ideation, project initiation, WBS, execution, closure and related business capabilities. Own their business logic and service contracts.
Application	Journey Orchestrator	Coordinates long-running workflows such as campaign creation, WBS progression, approvals and closure using state management, retries and timeout handling.
Application	AI Orchestrator	Coordinates AI Agent workflows .
Application	Rule Engine	Executes configurable decision logic such as approval matrix, rules, validations and threshold-based policies. Should support admin-managed changes.
Application	Caching	In-memory cache for frequently accessed reference data, session-adjacent data, hot reads and derived responses to reduce latency and backend load.
Application	Integration Microservices	Anti-corruption services that isolate EPMP core from external systems through protocol conversion, mapping, retries and resilience controls.

REVIEW REF NO.	EA REVIEW VERSION	DATE OF REVIEW	REVIEWER	EXCEPTION APPROVAL?	APPROVAL STATUS & REMARKS
<EA1234>	<1.0/1.1/etc>	(DD-MM-YYYY)	RAKESH K PANDEY	(YES/NO)	(APPROVED/REJECTED/PENDING FOR INFO.)

PROJECT NAME	DEMAND NUMBER	BUSINESS DEPTT.	APPLICATION DEPTT.	BRD APPROVED?	PROJECT MANAGER	SOLUTION TYPE
Enterprise Project Management Platform(EPMP)	SCP25260824165280	DE-GOV1	DE-GOV1	Yes	Aman Kumar Jha	NEW
SOLUTION DESIGN DOCUMENT NAME	**DOC VERSION**	**REQUEST DATE**	**REVIEW STAGE**	**TYPE CLASSIFICATION**	**APP. SUPPORT DEPTT.**	**APPLICATION NAME**
EPMP Solution Architecture	1.0	25-03-2026	DESIGN	A	GOV1	Enterprise Project Management Platform(EPMP)

Component Descriptions

Layer	Component	Technical Description
Data / Analytics	BI Dashboard and Reporting	Provides MIS, KPI dashboards, portfolio reporting and executive decision-making.
Data / Analytics	Enterprise Data Platform	Separates analytical consumption from transactional workload.
Data / Content	Document Repository	Stores project artefacts, supporting documents, evidence and attachments with controlled access, metadata and retrieval support. ECM (Opentext) will be used to store documents. ECM is deployed MISIL on premises and presently being authenticated with MSIL Entra ID.
Data	RDBMS	Relational system of record for structured transactional data such as projects, tasks, approvals, master data references and audit-linked entities.
Data	NoSQL	Schema-flexible store for high-volume metadata, activity streams, de-normalised views, session-like data or selective event-driven materialisations and logging data.
Data	Search Service	Indexing and query service enabling fast full-text search, faceting, filters and relevance-based retrieval across projects, WBS, documents and metadata.
Integration	Event Messaging Platform	Provides asynchronous communication backbone for system events, decoupled processing, notifications and integration triggers.
Gen AI	AI Orchestrator	Coordinates GenAI workflows by routing requests, invoking appropriate models/agents, and managing multi-step reasoning or tool execution.
Gen AI	Persona-Based Agents	Task-specific AI agents aligned to user roles (e.g., PM, CoE Head) that execute contextual actions, reasoning, and decision support within EPMS workflows.
Gen AI	LLM (Large Language Model)	Core AI model that processes natural language, generates responses, and performs reasoning based on prompts and contextual inputs.
Gen AI	Vector Database	Stores embeddings of EPMS data to enable semantic search, retrieval-augmented generation (RAG), and context-aware AI responses.
Gen AI	GenAI Platform	Provides foundational capabilities for model hosting, prompt management, guardrails, monitoring, and integration of AI services within EPMS.

REVIEW REF NO.	EA REVIEW VERSION	DATE OF REVIEW	REVIEWER	EXCEPTION APPROVAL?	APPROVAL STATUS & REMARKS
<EA1234>	<1.0/1.1/etc>	(DD-MM-YYYY)	RAKESH K PANDEY	(YES/NO)	(APPROVED/REJECTED/PENDING FOR INFO.)

PROJECT NAME	DEMAND NUMBER	BUSINESS DEPTT.	APPLICATION DEPTT.	BRD APPROVED?	PROJECT MANAGER	SOLUTION TYPE
Enterprise Project Management Platform(EPMP)	SCP25260824165280	DE-GOV1	DE-GOV1	Yes	Aman Kumar Jha	NEW
SOLUTION DESIGN DOCUMENT NAME	**DOC VERSION**	**REQUEST DATE**	**REVIEW STAGE**	**TYPE CLASSIFICATION**	**APP. SUPPORT DEPTT.**	**APPLICATION NAME**
EPMP Solution Architecture	1.0	25-03-2026	DESIGN	A	GOV1	Enterprise Project Management Platform(EPMP)

Component Descriptions

Layer	Component	Technical Description
Observability / Platform	Log Agent	Collects application and infrastructure logs, metrics and traces from services and runtime components for monitoring and troubleshooting.
Observability / Platform	Istio Service Mesh	Provides service-to-service traffic control, mTLS, observability and policy enforcement for microservice communication.
MSIL Internal Systems	Jenkins	Build and deployment automation tool that may exchange pipeline status, package metadata or automation triggers with EPMP platform.
MSIL Internal Systems	IBM QRadar	SIEM metrices to be integrated in EPMP dashboard.
MSIL Internal Systems	MSIL Startup Applications	Data entered by the startup entities to be integrated into EPMP Innovation process.
External Systems	TENSAI	GEN AI based value proposition platform , integration into EPMP.
External Systems	Iserve	KPI's for CISO approval data, to be integrated into EPMP dashboard.
External Systems	Zendesk	Customer/support platform that can provide ticketing data, issue references or support workflow integration into EPMP.
External Systems	Bitsight	Cybersecurity Risk Rating , to be integrated into EPMP dashboard
External Systems	SuccessFactors	HR platform used for employee, organisation, role or resource-related reference data in EPMP.
External Systems	JIRA	Third-party project, issue or development tracking platform integrated with EPMP for synchronisation of tickets or status.

REVIEW REF NO.	EA REVIEW VERSION	DATE OF REVIEW	REVIEWER	EXCEPTION APPROVAL?	APPROVAL STATUS & REMARKS
<EA1234>	<1.0/1.1/etc>	(DD-MM-YYYY)	RAKESH K PANDEY	(YES/NO)	(APPROVED/REJECTED/PENDING FOR INFO.)

TECHNICAL ARCHITECTURE DIAGRAM

EPMP

PROJECT NAME	DEMAND NUMBER	BUSINESS DEPTT.	APPLICATION DEPTT.	BRD APPROVED?	PROJECT MANAGER	SOLUTION TYPE
Enterprise Project Management Platform(EPMP)	SCP25260824165280	DE-GOV1	DE-GOV1	Yes	Aman Kumar Jha	NEW
SOLUTION DESIGN DOCUMENT NAME	**DOC VERSION**	**REQUEST DATE**	**REVIEW STAGE**	**TYPE CLASSIFICATION**	**APP. SUPPORT DEPTT.**	**APPLICATION NAME**
EPMP Solution Architecture	1.0	25-03-2026	DESIGN	A	GOV1	Enterprise Project Management Platform(EPMP)

Deployment Architecture

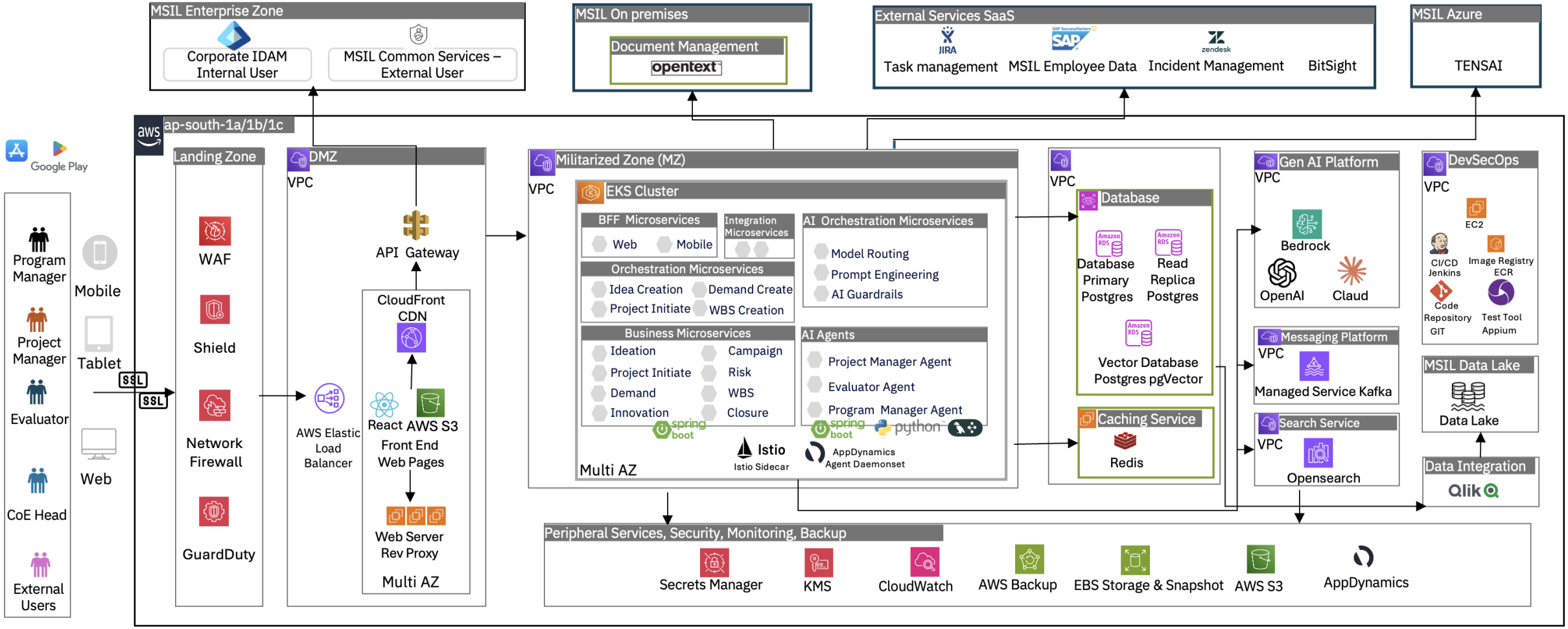

REVIEW REF NO.	EA REVIEW VERSION	DATE OF REVIEW	REVIEWER	EXCEPTION APPROVAL?	APPROVAL STATUS & REMARKS
<EA1234>	<1.0/1.1/etc>	(DD-MM-YYYY)	RAKESH K PANDEY	(YES/NO)	(APPROVED/REJECTED/PENDING FOR INFO.)

SECURITY ARCHITECTURE DIAGRAM

EPMP

PROJECT NAME	DEMAND NUMBER	BUSINESS DEPTT.	APPLICATION DEPTT.	BRD APPROVED?	PROJECT MANAGER	SOLUTION TYPE
Enterprise Project Management Platform(EPMP)	SCP25260824165280	DE-GOV1	DE-GOV1	Yes	Aman Kumar Jha	NEW
SOLUTION DESIGN DOCUMENT NAME	**DOC VERSION**	**REQUEST DATE**	**REVIEW STAGE**	**TYPE CLASSIFICATION**	**APP. SUPPORT DEPTT.**	**APPLICATION NAME**
EPMP Solution Architecture	1.0	25-03-2026	DESIGN	A	GOV1	Enterprise Project Management Platform(EPMP)

Security Architecture

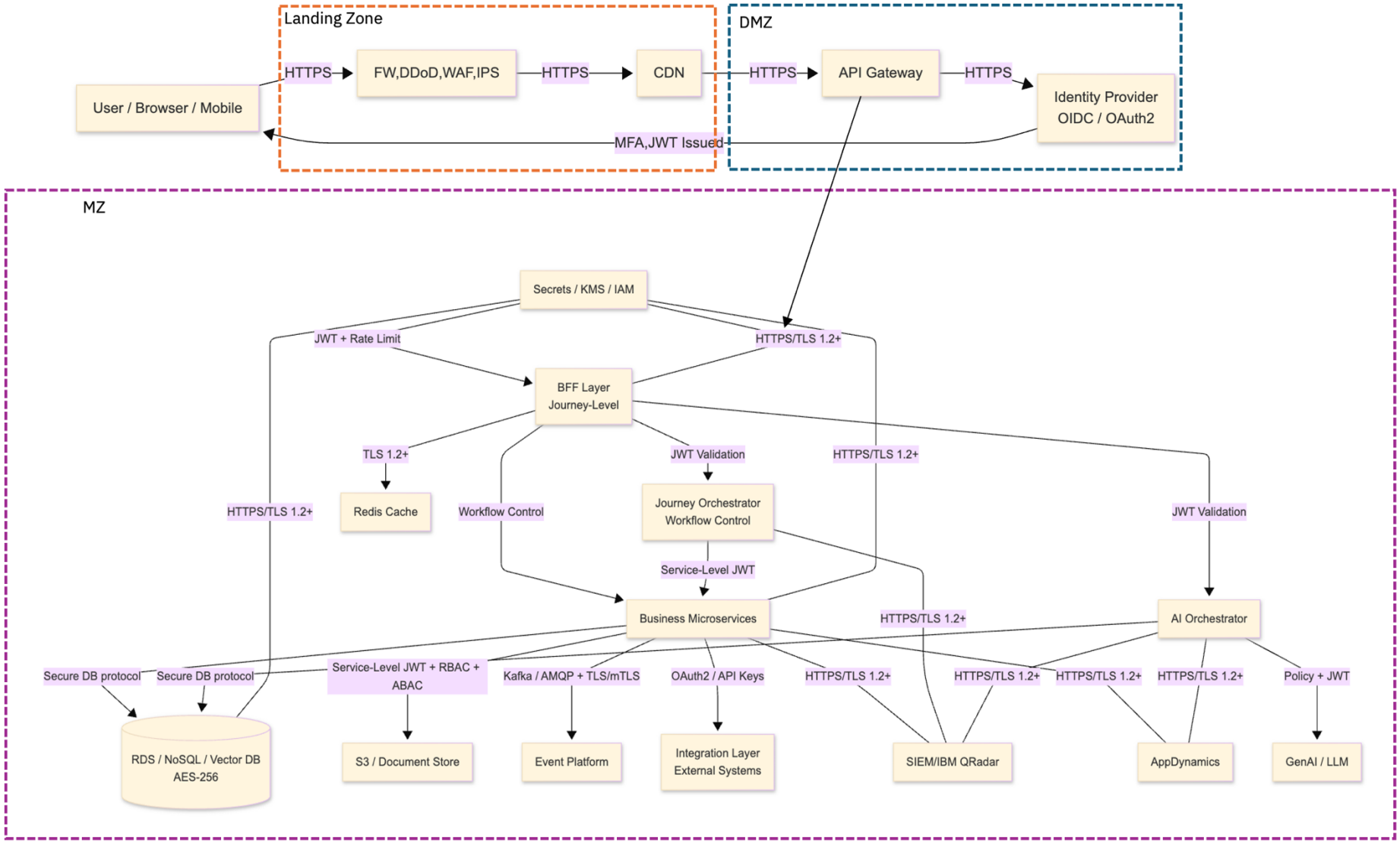

REVIEW REF NO.	EA REVIEW VERSION	DATE OF REVIEW	REVIEWER	EXCEPTION APPROVAL?	APPROVAL STATUS & REMARKS
<EA1234>	<1.0/1.1/etc>	(DD-MM-YYYY)	RAKESH K PANDEY	(YES/NO)	(APPROVED/REJECTED/PENDING FOR INFO.)

PROJECT NAME	DEMAND NUMBER	BUSINESS DEPTT.	APPLICATION DEPTT.	BRD APPROVED?	PROJECT MANAGER	SOLUTION TYPE
Enterprise Project Management Platform(EPMP)	SCP25260824165280	DE-GOV1	DE-GOV1	Yes	Aman Kumar Jha	NEW
SOLUTION DESIGN DOCUMENT NAME	**DOC VERSION**	**REQUEST DATE**	**REVIEW STAGE**	**TYPE CLASSIFICATION**	**APP. SUPPORT DEPTT.**	**APPLICATION NAME**
EPMP Solution Architecture	1.0	25-03-2026	DESIGN	A	GOV1	Enterprise Project Management Platform(EPMP)

Security Architecture Details

Source Component	Target Component	Communication Purpose	Protocol / Communication Type	Security Mechanism	Authentication / Authorization	Remarks
User Browser / Mobile App	CDN	Access static content, web assets	HTTPS	TLS 1.2+ / 1.3	Public access or token-aware access as applicable	CDN should enforce HTTPS only
User Browser / Mobile App	Reverse Proxy / Load Balancer	Entry point for UI/API traffic	HTTPS	TLS 1.2+ / 1.3	Token forwarding / session propagation/MFA	SSL termination can happen at LB or gateway as per design
External User	Web Portal	Access EPMS over internet	HTTPS	TLS 1.2+ / 1.3, WAF rules, DDoS protection	JWT / SSO via Azure AD/MFA	External user access should be restricted via policy and role checks
Reverse Proxy / Load Balancer	API Gateway	Route application/API requests	HTTPS	TLS 1.2+ / 1.3	Mutual trust within controlled zone, optional mTLS	Prefer encrypted internal hop also
API Gateway	Azure AD / Authorization Server	Authentication and token validation	HTTPS/REST	TLS 1.2+ / 1.3	OAuth 2.0 / OpenID Connect / JWT validation	Gateway validates issuer, audience, expiry, signature
API Gateway	MSIL Common Services	Enterprise service access	HTTPS / REST	TLS 1.2+ / 1.3	Service account / OAuth2 / JWT	Depends on common service contract
API Gateway	Web BFF / Mobile BFF	Forward authenticated API requests	HTTPS / REST	TLS 1.2+ / 1.3	JWT propagation	Gateway should pass validated user claims
Web BFF / Mobile BFF	Caching Layer	Session/context/cache lookup	TLS-enabled Redis protocol	TLS, network isolation	Auth token / Redis auth / IAM as applicable	Do not keep sensitive business data in plain cache
Web BFF / Mobile BFF	Biz Microservices	Business API calls	HTTPS / REST	TLS, preferably mTLS in service mesh environments	JWT propagation, service authorization	User claims may be forwarded for downstream authorization
Web BFF / Mobile BFF	Journey Orchestrator	Initiate business workflows	HTTPS / REST	TLS, preferably mTLS	JWT + service authorization	Orchestrator should revalidate permissions for workflow actions
Web BFF / Mobile BFF	AI Orchestrator	Invoke AI-enabled features	HTTPS / REST	TLS 1.2+ / 1.3	JWT + policy-based authorization	Sensitive prompts and outputs should be audited
Biz Microservices	Biz Microservices	Inter-service domain communication	REST	mTLS via service mesh	Service identity + JWT/pass-through claims where needed	Recommended to use Istio/App Mesh mTLS
Biz Microservices	Journey Orchestrator	Workflow coordination	REST / event call	mTLS or TLS 1.2+	Service-to-service auth	Long-running processes should use signed and traceable requests
Biz Microservices	Integration Microservices	External system invocation	REST / async trigger	TLS / mTLS	Service authentication	Adapter acts as anti-corruption and isolation layer
Biz Microservices	Document Repository	Store/retrieve documents	HTTPS / API / SDK	TLS 1.2+ / 1.3	Service auth / IAM / signed URL / access token	Documents should be encrypted at rest
Biz Microservices	RDBMS	Transactional data persistence	Secure DB protocol	TLS 1.2+ / 1.3	DB user / IAM auth / secret-managed creds	Restrict direct DB access to service accounts only
Biz Microservices	NoSQL / Vector DB	Metadata / AI / flexible data access	Secure DB protocol	TLS 1.2+ / 1.3	Service account / IAM / DB creds	Apply network segmentation and scoped permissions

REVIEW REF NO.	EA REVIEW VERSION	DATE OF REVIEW	REVIEWER	EXCEPTION APPROVAL?	APPROVAL STATUS & REMARKS
<EA1234>	<1.0/1.1/etc>	(DD-MM-YYYY)	RAKESH K PANDEY	(YES/NO)	(APPROVED/REJECTED/PENDING FOR INFO.)

PROJECT NAME	DEMAND NUMBER	BUSINESS DEPTT.	APPLICATION DEPTT.	BRD APPROVED?	PROJECT MANAGER	SOLUTION TYPE
Enterprise Project Management Platform(EPMP)	SCP25260824165280	DE-GOV1	DE-GOV1	Yes	Aman Kumar Jha	NEW
SOLUTION DESIGN DOCUMENT NAME	**DOC VERSION**	**REQUEST DATE**	**REVIEW STAGE**	**TYPE CLASSIFICATION**	**APP. SUPPORT DEPTT.**	**APPLICATION NAME**
EPMP Solution Architecture	1.0	25-03-2026	DESIGN	A	GOV1	Enterprise Project Management Platform(EPMP)

Security Architecture Details

Source Component	Target Component	Communication Purpose	Protocol / Communication Type	Security Mechanism	Authentication / Authorization	Remarks
Biz Microservices	Rule Engine	Rule evaluation / decision lookup	REST	TLS 1.2+ / mTLS	Service authentication	Rule changes should be admin-controlled and audited
Biz Microservices	Event Messaging Platform	Publish domain events	AMQP / Kafka	TLS, preferably mTLS if supported	Producer auth via cert / IAM / SASL	Events should carry minimal sensitive data
Biz Microservices / Orchestrator / AI Orchestrator	Log Agent / Monitoring	Send logs, traces, metrics	Agent protocol	TLS 1.2+ / 1.3	Agent/service identity	Avoid logging secrets, tokens, or PII
Journey Orchestrator	Event Messaging Platform	Publish workflow events	AMQP / Kafka	TLS 1.2+ / 1.3	Producer identity / IAM	Workflow audit events recommended
Integration Microservices	Event Messaging Platform	Publish integration events	AMQP / Kafka	TLS 1.2+ / 1.3	Producer auth	Good for decoupled webhook processing
Integration Microservices	External Systems (JIRA, Zendesk, SAP SuccessFactors, Jenkins)	System-to-system integration	HTTPS / REST / Webhook / Odata API	TLS 1.2+ / 1.3	OAuth2, API key, Basic Auth, signed webhook, service credentials	Auth model depends on external system
GenAI Platform	LLM	Model inference call	HTTPS / API	TLS 1.2+ / 1.3	Platform-managed credentials / IAM	Prefer private endpoint if available
AI Orchestrator	GenAI Platform	Prompt/response invocation	HTTPS / API	TLS 1.2+ / 1.3	API key / IAM / OAuth depending on platform	Apply prompt guardrails and response filtering
AI Orchestrator	Vector DB	Semantic retrieval	Secure DB Protocol / API	TLS 1.2+ / 1.3	Service auth	Retrieval scope should respect user authorization
Reports & Dashboards	Enterprise Data Lake	Reporting / analytics access	HTTPS / API	TLS 1.2+ / 1.3	IAM / service role / RBAC	BI access should be role-restricted
Project Manager / Admin UI	Rule Engine	Rule configuration	HTTPS	TLS 1.2+ / 1.3	RBAC, admin privileges	High-risk operation; must be audited
Search Service	RDBMS / NoSQL / Vector DB	Read indexed source data	Secure DB / API	TLS 1.2+ / 1.3	Service account	Prefer controlled ingestion path over broad DB access
Platform / Monitoring	Incident Management Tool	Raise alerts / incidents	HTTPS / API	TLS 1.2+ / 1.3	API token / service account	For Sev1/Sev2 operational alerts
Backup Systems	Databases / File Systems	Backup and restore	Secure backup protocol	TLS 1.2+ + encryption at rest	Backup service identity	Backup copies must also be encrypted
DevOps / CI-CD	Runtime Platform / EKS / Services	Deployment / rollout	HTTPS / kubectl / pipeline integration	TLS 1.2+ / 1.3	IAM role / service account / signed artifacts	Enforce signed builds and least privilege
Security Tools	Endpoints / Workloads	Vulnerability scan / compliance check	Secure agent/API	TLS 1.2+ / 1.3	Managed service identity	Findings should feed central monitoring

REVIEW REF NO.	EA REVIEW VERSION	DATE OF REVIEW	REVIEWER	EXCEPTION APPROVAL?	APPROVAL STATUS & REMARKS
<EA1234>	<1.0/1.1/etc>	(DD-MM-YYYY)	RAKESH K PANDEY	(YES/NO)	(APPROVED/REJECTED/PENDING FOR INFO.)

NON-FUNCTIONAL REQUIREMENTS

EPMP

PROJECT NAME	DEMAND NUMBER	BUSINESS DEPTT.	APPLICATION DEPTT.	BRD APPROVED?	PROJECT MANAGER	SOLUTION TYPE
Enterprise Project Management Platform(EPMP)	SCP25260824165280	DE-GOV1	DE-GOV1	Yes	Aman Kumar Jha	NEW
SOLUTION DESIGN DOCUMENT NAME	**DOC VERSION**	**REQUEST DATE**	**REVIEW STAGE**	**TYPE CLASSIFICATION**	**APP. SUPPORT DEPTT.**	**APPLICATION NAME**
EPMP Solution Architecture	1.0	25-03-2026	DESIGN	A	GOV1	Enterprise Project Management Platform(EPMP)

Category	Non-functional requirement	Requirements	Specifications			
System Load			**Current**	**Future in 1 year**	**In 2 years**	**In 3 years**
	Total number of users of the system		30,000			
	Number of concurrent users at peak time		3,000			
	Number of concurrent users (average)		1,800			
Response Time	Target & Maximum Response Time (seconds) for different categories (add categories as per project need)					
	Landing page / Main Screen		<500 ms			
	Normal pages		<500 ms			
	Dashboard/heavy processing page		1 sec			
	Reports		1 sec			
	Threshold for service API (for non UI applications)		<=1 Sec			
	Target acceptance criteria like response time on 95 percentile of requests		<=2 Sec			
	Background task completion		<=30 Sec			
	Asynchronous notifications		<=5 Sec			
Performance & Integration	Availability & Reliability					
	Business-as-usual uptime SLA (e.g., 99.9% / 99.95%)		99.90%	99.90%	99.90%	99.90%
	Planned vs unplanned downtime	Planned- max 1 hour/month unplanned- <=0.1% monthly downtime				
	Active-active / active-passive setup	TBD				
	Observability & Monitoring	Required				
	Application metrics (CPU, memory, latency)	Server CPU, Memory, Latency.				
	Centralized logging- Operational logs	Yes				
	Alerting & escalation	Yes				
	Dashboard availability (Grafana/App Insights/etc.)	App Dynamics , API monitoring				
	API versioning	Required				
	External dependency SLAs	<1.5 sec for SaaS based API response time				
	Retry & timeout policies	3 retries and				
	DevOps & Release Management	Required				
	Zero-downtime deployment	Yes				
	Rollback strategy	Yes				

REVIEW REF NO.	EA REVIEW VERSION	DATE OF REVIEW	REVIEWER	EXCEPTION APPROVAL?	APPROVAL STATUS & REMARKS
<EA1234>	<1.0/1.1/etc>	(DD-MM-YYYY)	RAKESH K PANDEY	(YES/NO)	(APPROVED/REJECTED/PENDING FOR INFO.)

PROJECT NAME	DEMAND NUMBER	BUSINESS DEPTT.	APPLICATION DEPTT.	BRD APPROVED?	PROJECT MANAGER	SOLUTION TYPE
Enterprise Project Management Platform(EPMP)	SCP25260824165280	DE-GOV1	DE-GOV1	Yes	Aman Kumar Jha	NEW
SOLUTION DESIGN DOCUMENT NAME	**DOC VERSION**	**REQUEST DATE**	**REVIEW STAGE**	**TYPE CLASSIFICATION**	**APP. SUPPORT DEPTT.**	**APPLICATION NAME**
EPMP Solution Architecture	1.0	25-03-2026	DESIGN	A	GOV1	Enterprise Project Management Platform(EPMP)

Category	Non-functional requirement	Requirements	Specifications				Category	Non-functional requirement
Security	Database encryption needed specify the tables, fields etc.	Encrypted at Rest and Transit						
	Anonymize PII in backups & analytics datasets	yes						
	Encryption mechanism to be used in Application	Specify						
	Communication between App, DB or other internal server needs to be controlled?	yes						
	Communication with external systems needs to be controlled?	yes						
	Communication protocol for external system integration	REST						
	Authentication mechanism for external system integration	OAuth2						
	SSL required for external APIs?	Yes						
	User is not allowed to access any url directly without login	Yes						
	Security threats like SQL injection	Yes						
	Security acceptance criteria like HCL AppScan							
	Role-based access control (RBAC)	Yes						
	Maker–checker approval workflows	Yes						
	IP whitelisting enabled	Yes						
	HMAC signing for internal APIs	Yes						
	MTLS for high-security endpoints	Yes						
	Data masking in non-prod environments	Yes						
	Session timeout & idle logout	5 min						
	Secure key management (HSM / Vault)							
Token Expiry & Session limits	JWT Expiry : 15 min							
	Idle timeout : 5 min							
	Absolute timeout : 8 hours							

REVIEW REF NO.	EA REVIEW VERSION	DATE OF REVIEW	REVIEWER	EXCEPTION APPROVAL?	APPROVAL STATUS & REMARKS
<EA1234>	<1.0/1.1/etc>	(DD-MM-YYYY)	RAKESH K PANDEY	(YES/NO)	(APPROVED/REJECTED/PENDING FOR INFO.)

PROJECT NAME	DEMAND NUMBER	BUSINESS DEPTT.	APPLICATION DEPTT.	BRD APPROVED?	PROJECT MANAGER	SOLUTION TYPE
Enterprise Project Management Platform(EPMP)	SCP25260824165280	DE-GOV1	DE-GOV1	Yes	Aman Kumar Jha	NEW
SOLUTION DESIGN DOCUMENT NAME	**DOC VERSION**	**REQUEST DATE**	**REVIEW STAGE**	**TYPE CLASSIFICATION**	**APP. SUPPORT DEPTT.**	**APPLICATION NAME**
EPMP Solution Architecture	1.0	25-03-2026	DESIGN	A	GOV1	Enterprise Project Management Platform(EPMP)

Category	Non-functional requirement	Requirements	Specifications			
Audit and Edit trail						
	Audited elements- What business elements will be audited?	User master, role & access configurations, Customer id, transactions, approval workflow, configuration changes, reference data, policy/rule configuration				
	Audited fields- What data fields will be audited?	Action type (create/update/delete etc), Fields name, old/new value, timestamp, roles, approval status, access, PII fields etc				
	Audit file characteristics (Audit & compliance logs)- Timestamp, user id, role	User ID, Timestamp				
	Approval logs (who approved what, when)	Yes				
	Elements- What elements history needs to be maintained	Version history, records to be retrieved, system must support comparison between versions				
	Audit Monitoring & Compliance Reporting	Yes				
Recovery and Backup						
	Custom Recovery process needed?	Yes				
	Disaster scenarios recovery timescales- How quickly does recovery takes to perform/ down time acceptable	RPO and RTO need to be specified in hours. RPO refers to the maximum duration of data loss that can be tolerated. RTO refers to the time required to resume operations after a disaster, typically from the Disaster Recovery (DR) site.		RPO = 15 minutes RTO = 1 hour		
	Backup frequency for disaster recovery - How often is backup taken for	Once a day or twice a day.				
	- Database (like Weekly full and Daily/ hourly transactional)	Daily full + hourly log backups				
	- Folders and files	Daily				
	- Set-up data	Once a day or twice a day.				
	- System state	Daily				
	- Code	On every release				
	Database purging / archival policy	Years or months.				

REVIEW REF NO.	EA REVIEW VERSION	DATE OF REVIEW	REVIEWER	EXCEPTION APPROVAL?	APPROVAL STATUS & REMARKS
<EA1234>	<1.0/1.1/etc>	(DD-MM-YYYY)	RAKESH K PANDEY	(YES/NO)	(APPROVED/REJECTED/PENDING FOR INFO.)

PROJECT NAME	DEMAND NUMBER	BUSINESS DEPTT.	APPLICATION DEPTT.	BRD APPROVED?	PROJECT MANAGER	SOLUTION TYPE
Enterprise Project Management Platform(EPMP)	SCP25260824165280	DE-GOV1	DE-GOV1	Yes	Aman Kumar Jha	NEW
SOLUTION DESIGN DOCUMENT NAME	**DOC VERSION**	**REQUEST DATE**	**REVIEW STAGE**	**TYPE CLASSIFICATION**	**APP. SUPPORT DEPTT.**	**APPLICATION NAME**
EPMP Solution Architecture	1.0	25-03-2026	DESIGN	A	GOV1	Enterprise Project Management Platform(EPMP)

Category	Non-functional requirement	Category	Current	Future in 1 year	In 2 years	In 3 years
Regulatory Compliance	Financial regulations (based on geography): SEBI (India), SEC / FINRA (US), GDPR / DPDP Act?	Yes				
	Data retention & archival rules	Yes				
	Audit log retention period	Years or months. TBD				
Document Management	Maximum number of documents per month		500	550	600	650
	Average size of each document		1-5 MB	1-5 MB	1-5 MB	1-5 MB
User Experience	Chrome (latest + last 2 versions)	Yes				
	Microsoft Edge (Chromium, latest + last 2)	Yes				
	Safari (macOS & iOS – last 2 versions)	Yes				
	Desktop	Yes				
	Tablet	Yes				
	Mobile	Yes				
	Orientation support (portrait/landscape)	Yes				
	Internationalization and localization (application level / code level / log level)	No				
	Languages supported	English				
	Date time display	Yes				
	Currency	All				
	Time-zone handling	All				
	Accessibility requirements	No				
	Text to speech	Yes				
	Speech to text	Yes				
	WCAG 2.1 AA compliance	Yes				

REVIEW REF NO.	EA REVIEW VERSION	DATE OF REVIEW	REVIEWER	EXCEPTION APPROVAL?	APPROVAL STATUS & REMARKS
<EA1234>	<1.0/1.1/etc>	(DD-MM-YYYY)	RAKESH K PANDEY	(YES/NO)	(APPROVED/REJECTED/PENDING FOR INFO.)

PROJECT NAME	DEMAND NUMBER	BUSINESS DEPTT.	APPLICATION DEPTT.	BRD APPROVED?	PROJECT MANAGER	SOLUTION TYPE
Enterprise Project Management Platform(EPMP)	SCP25260824165280	DE-GOV1	DE-GOV1	Yes	Aman Kumar Jha	NEW
SOLUTION DESIGN DOCUMENT NAME	**DOC VERSION**	**REQUEST DATE**	**REVIEW STAGE**	**TYPE CLASSIFICATION**	**APP. SUPPORT DEPTT.**	**APPLICATION NAME**
EPMP Solution Architecture	1.0	25-03-2026	DESIGN	A	GOV1	Enterprise Project Management Platform(EPMP)

Category	Non-functional requirement	Category	Current	Future in 1 year	In 2 years	In 3 years	Category	Non-functional requirement
Performance & System Load	System must handle 2x peak load for 30 min							
	System must handle 3x burst load for 5 min without failure							
	Auto-scaling must instantly respond to burst traffic							
	Batch processing window							
	End- of -day batch must finish within 45 minutes							
	End-of-month batch must finish within 4 hours							
	Queue Backlog tolerance							
	Queue backlog tolerance= max 5000 messages							
	System must auto-scale consumers when backlog>1000 messages							
	API Rate limits/ Throttling specs							
	Rate limit= 300 requests/min per user, 1000 requests/min per client app							
	On throttling: return HTTP 429 + Retry-After header							
	Client must backoff and retry							
UX- Messaging Standards	Error messages must not expose stack trace, DB info							
Graceful Degradation	Use cached data for 10 min							
	Make portal raed-only							
	Disable non-critical features							
Virus Scanning	All uploads scanned with anti-malware							
	Allowed file types restricted							
Retention Duration	KYC: 10 years							
	Contracts: 7 years							
	Logs (System/application) : 1 years, Security Logs : 3 years, Audit Logs : 7 years							

REVIEW REF NO.	EA REVIEW VERSION	DATE OF REVIEW	REVIEWER	EXCEPTION APPROVAL?	APPROVAL STATUS & REMARKS
<EA1234>	<1.0/1.1/etc>	(DD-MM-YYYY)	RAKESH K PANDEY	(YES/NO)	(APPROVED/REJECTED/PENDING FOR INFO.)